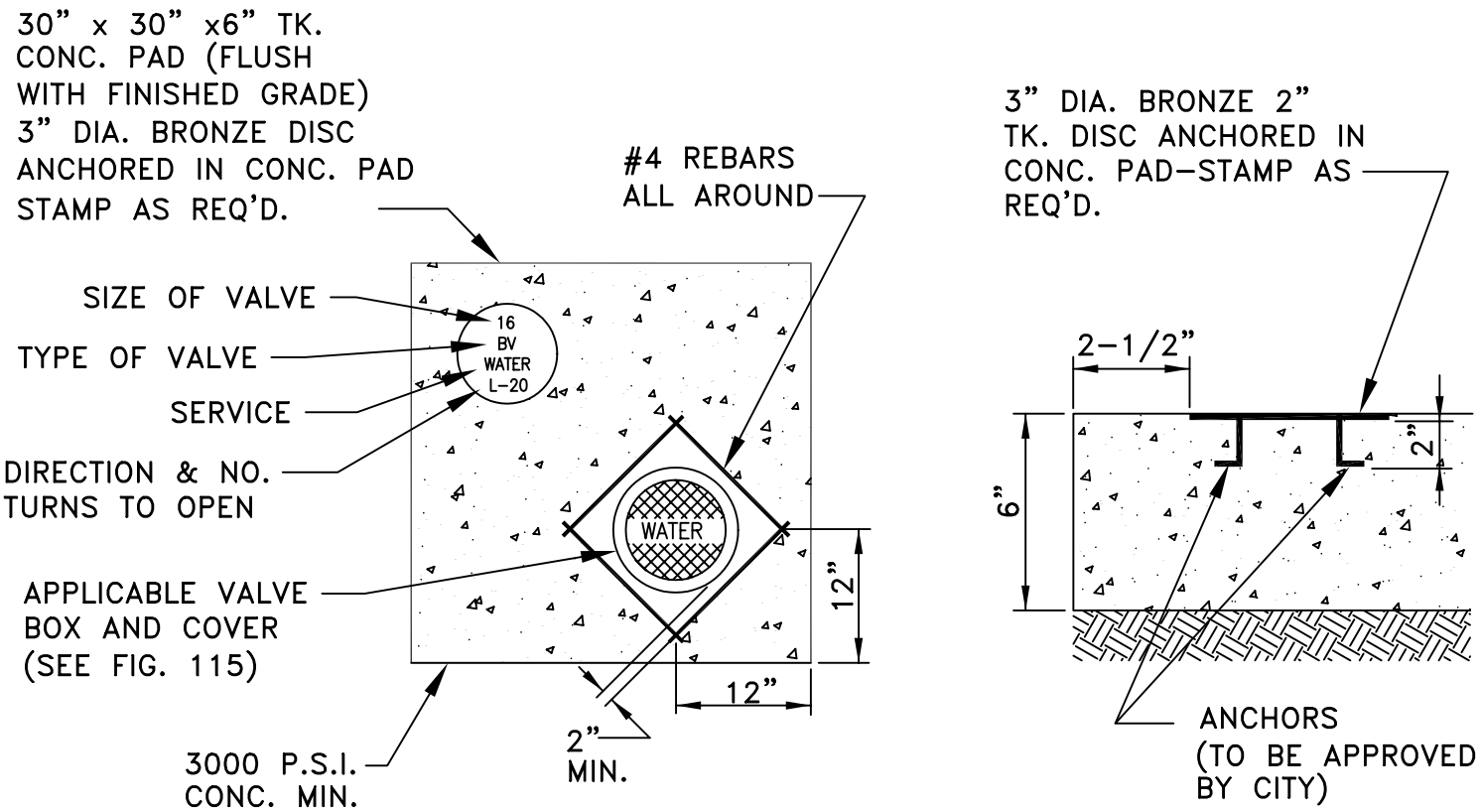

VALVES 16 INCHES AND LARGER

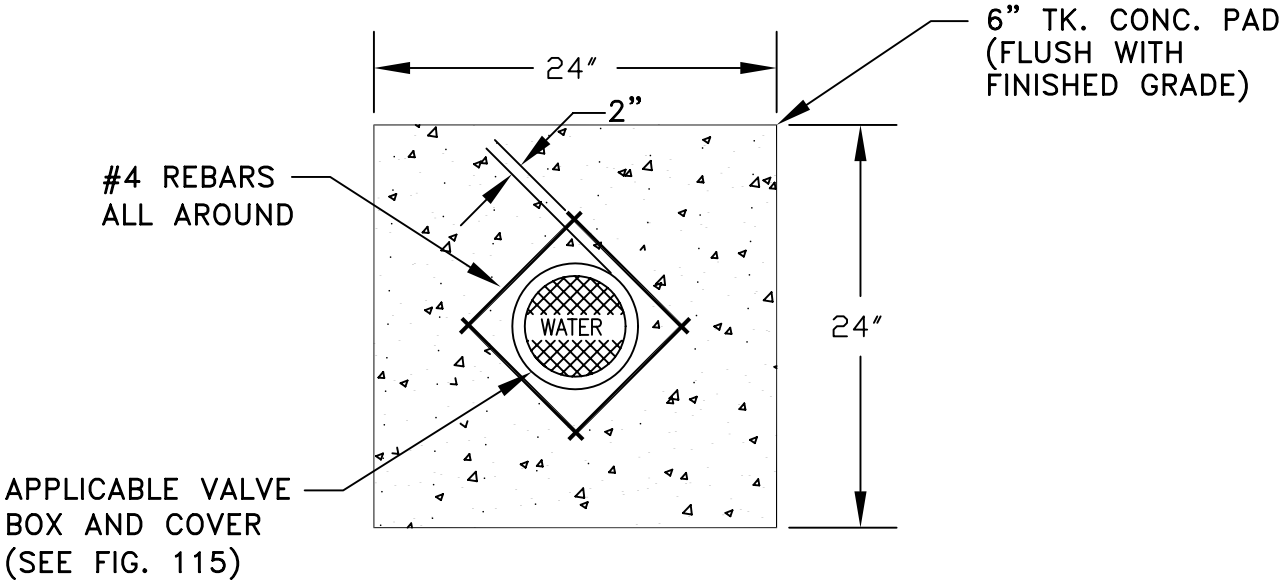

VALVES SMALLER THAN 16 INCHES

VALVE BOX PAD DETAIL

CITY OF SANFORD	1999	FIG. 107